# ESP32 Dev Board

## USB-C CONNECTOR 1

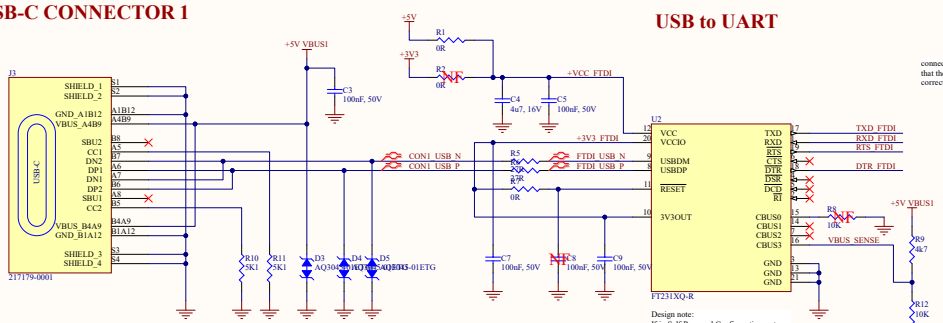


## USB to UART

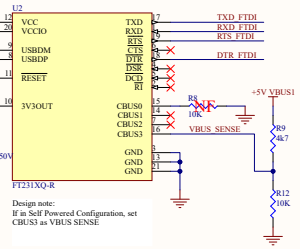


## POWER LED

## USER LED

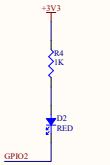


## HEADERS

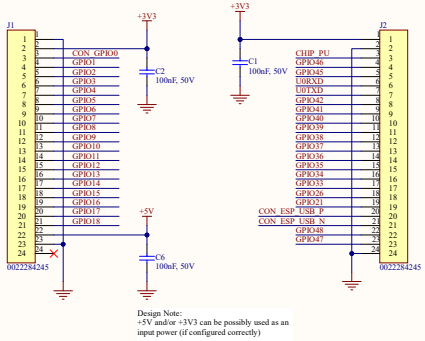


## 5V to 3V3

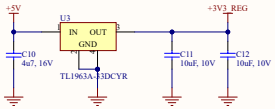


## USB-C CONNECTOR 2

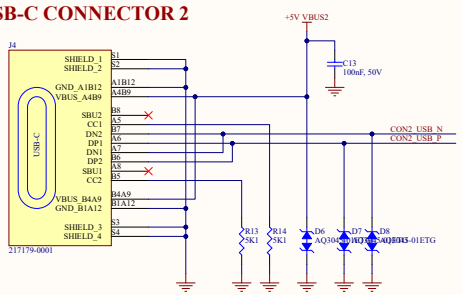


## 5V POWER SELECTION

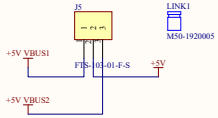


## 3V3 POWER SELECTION

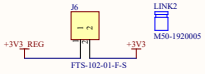


## Serial Signals Handling

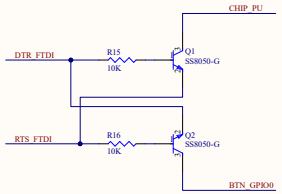


## RESET BUTTON

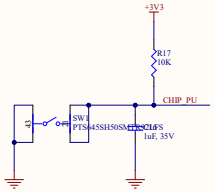


## BOOT/ USER BUTTON

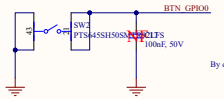


## ESP32 MODULE

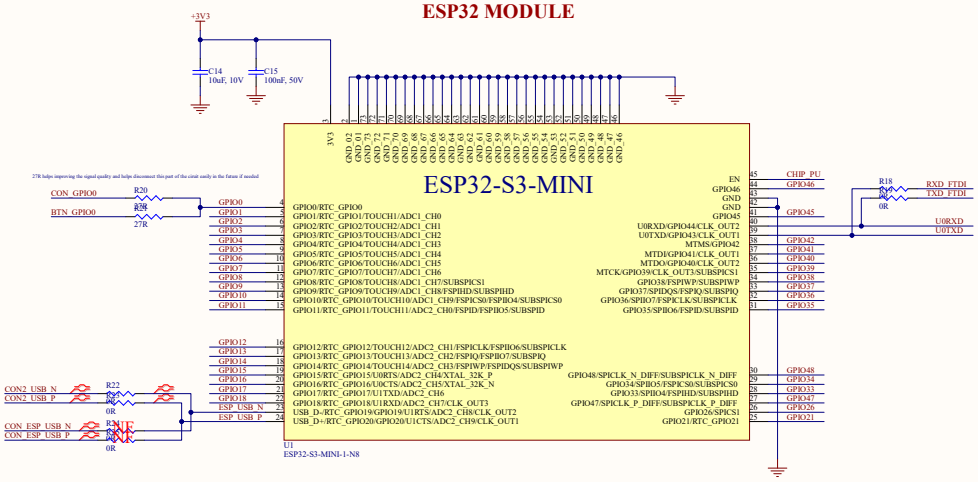


| | | |
|---|---|---|
| Title: ESP32 Dev Board | | (C) Designed by Mahmoud Osman |
| Size: A2 | Number | Revision |
| Date: 6/12/2025 | | Sheet of |
| File: D:\Altium\..\ESP32 Dev Board.SchDoc | | Drawn By: |